MANIFOLDS

MFD-2I-2□-H-BPF-02
NB: 1/8" BSPP Female Sockets

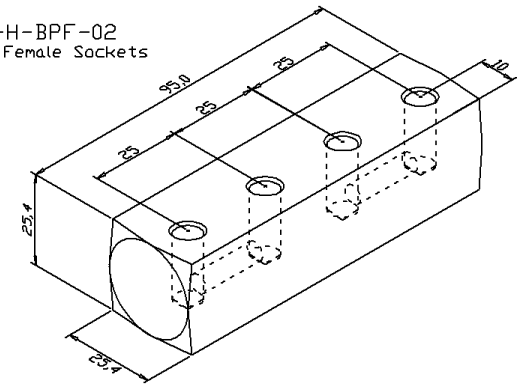

MFD-2I-2□-H-BPF-04
NB: 1/4" BSPP Female Sockets

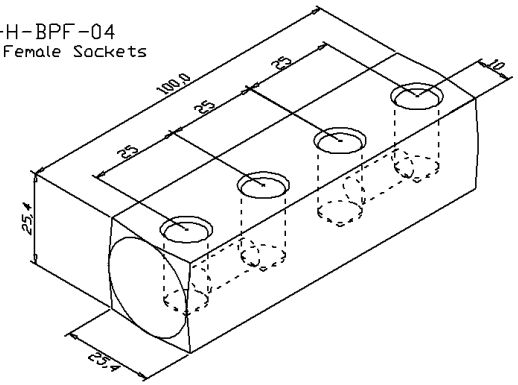

MFD-2I-2□-H-BPF-06
NB: 3/8" BSPP Female Sockets

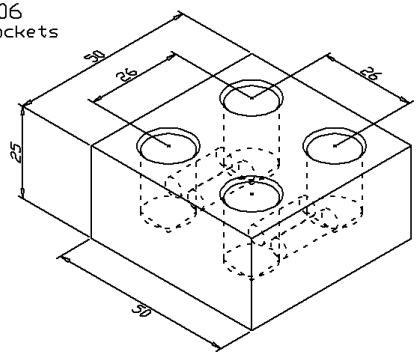

MFD-4I-4□-V-BPF-04
NB: 1/4" BSPP Female Sockets

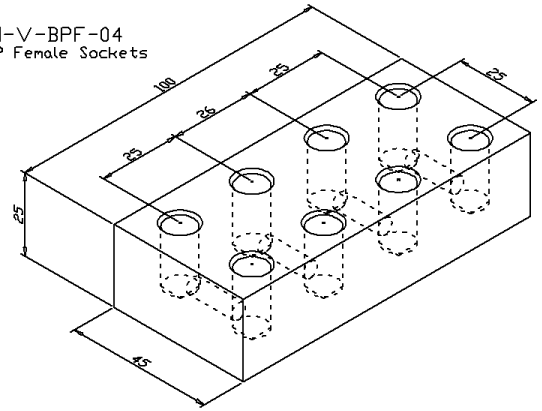

MFD-4I-4□-V-BPF-04 Slim
NB: 1/4" BSPP Female Sockets

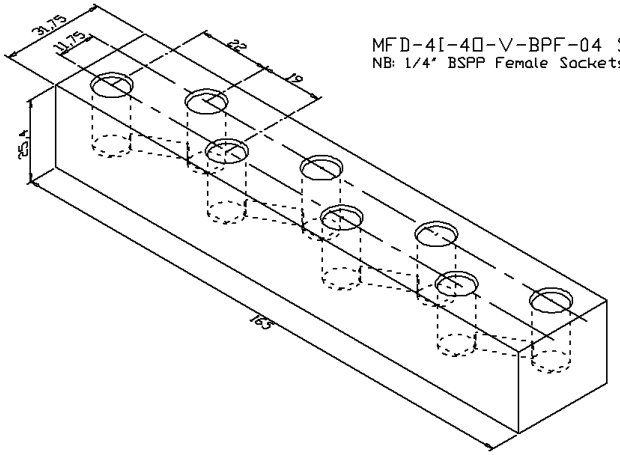
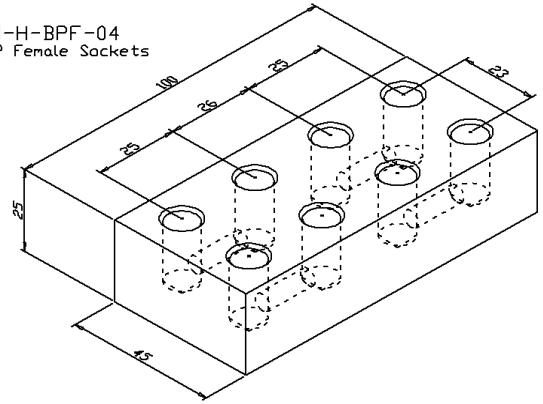
MFD-4I-4□-H-BPF-04
NB: 1/4" BSPP Female Sockets